Фуріоза / Furiosa

Туалетний стіл
Dressing table

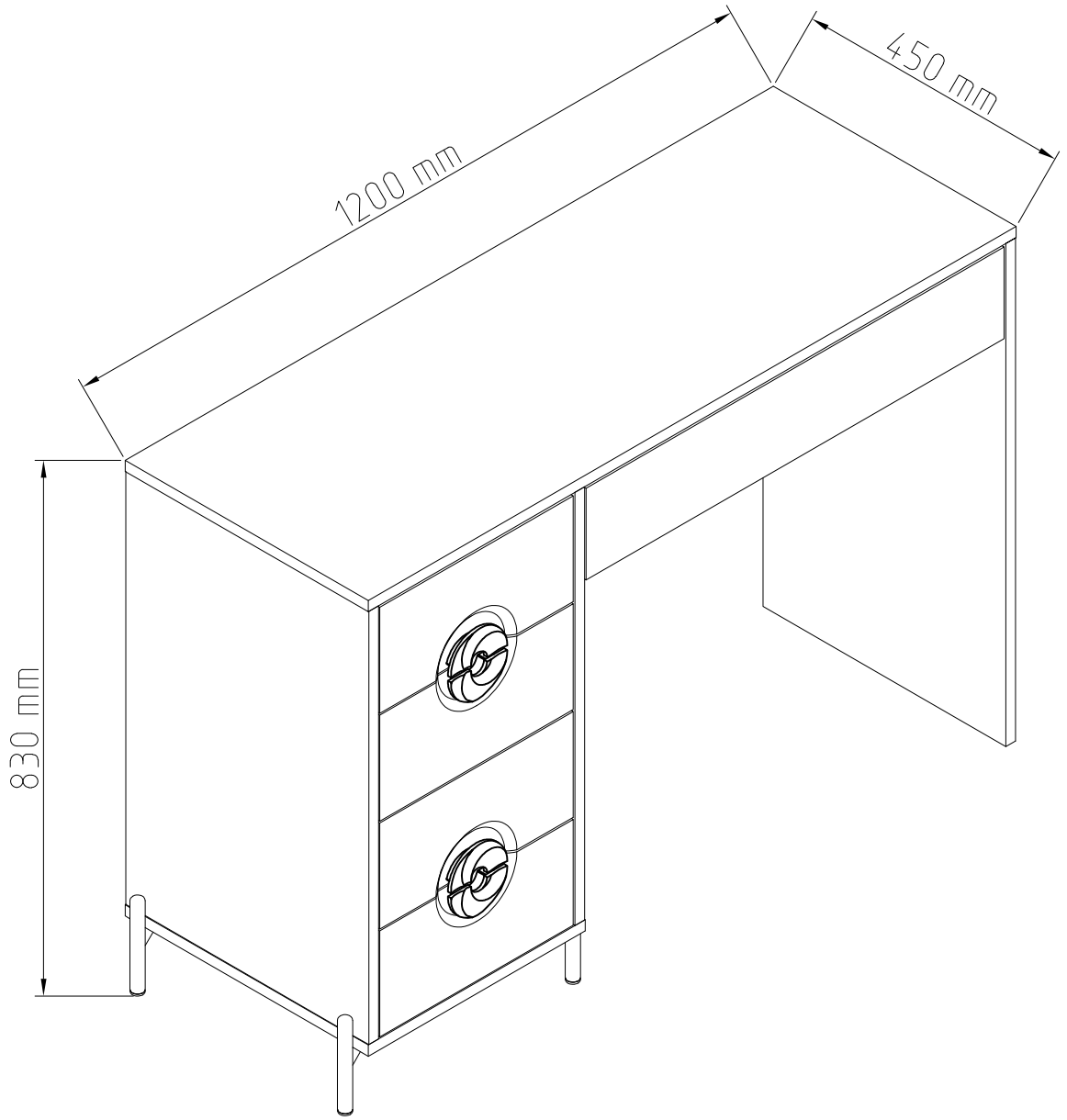

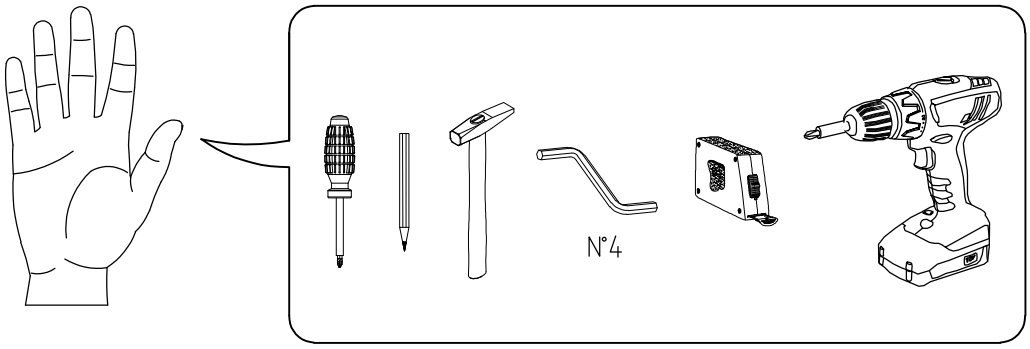

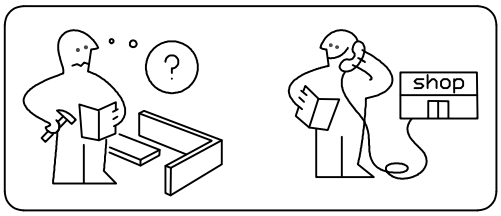

A1	8*30mm	x46
D	⌀20mm	x36
B1	6,3*50mm	x16
I58	9378/64	x4
C1	6*43mm	x20
D1	15/15	x20
H2	RV-8	x18
E6	3,5*16mm	x46
G3	M 4*12mm	x8
M14	432.20.852 L-350 mm	x1
M14	432.20.853 L-400 mm	x4
K42	Ф.311.099	x4
2E	4,2*16mm	x16
M4	L-333 mm	x1
K15	5*15*50	x2
B	⌀12mm	x16

№	a*b	x	N°→
1/1	695x450	1	1/1
1/2	695x450	1	1/1
2	807x450	1	1/1
3	1200x450	1	1/1
4	402x450	1	1/1
5	250x780	1	1/1
6	170x358	2	1/1
7	170x358	2	1/1
8	147x774	1	1/1
9/1	400x120	4	1/1
9/2	400x120	4	1/1
10/1	350x90	1	1/1
10/2	350x90	1	1/1
11	305x120	4	1/1
12	721x90	1	1/1
13	314x393	4	1/1
14	730x343	1	1/1
15	704x373	1	1/1
	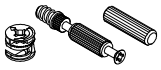		

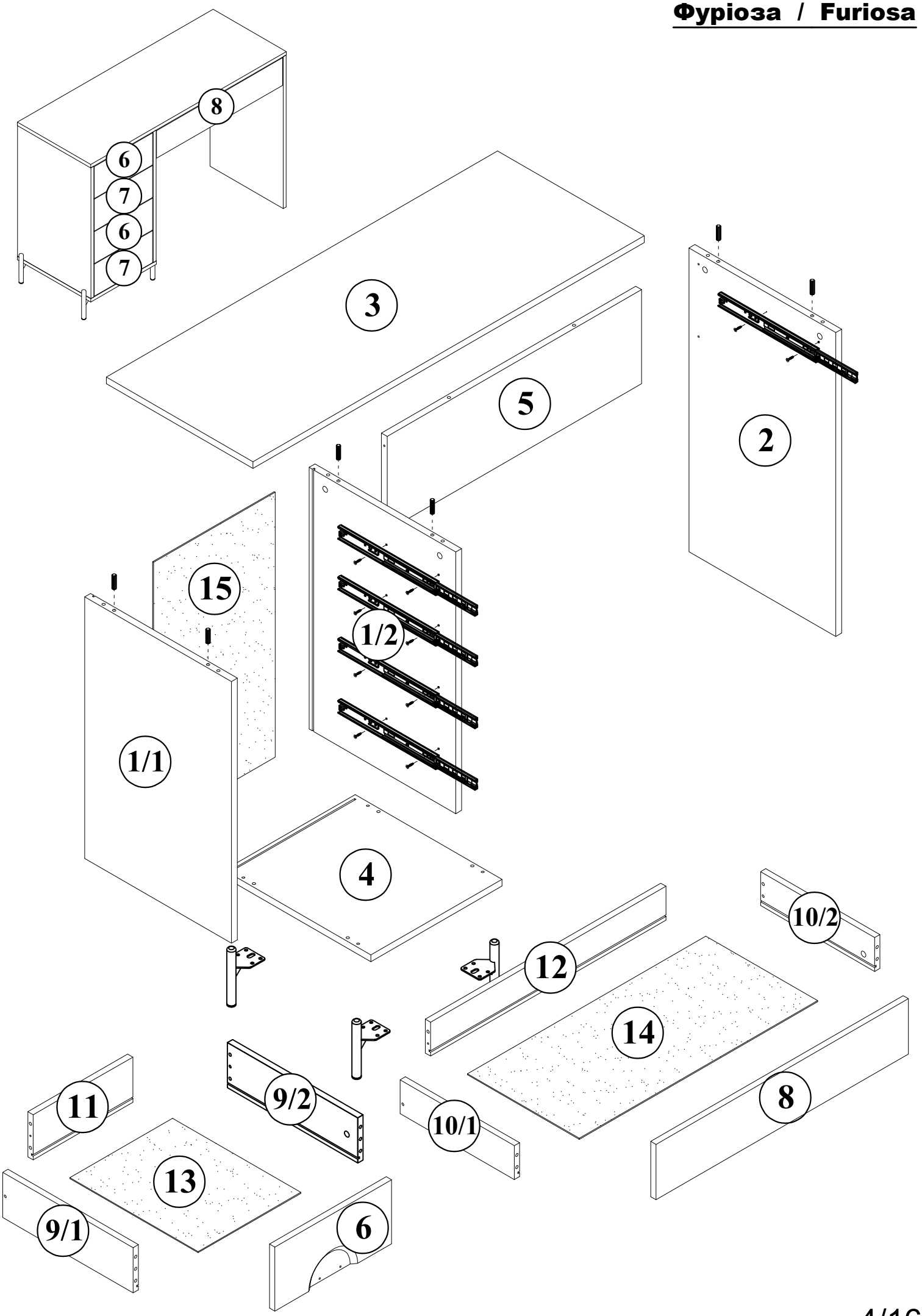
8
6
7
6
7
3
5
2
15
1/2
1/1
4
10/2
12
14
11
9/2
10/1
8
13
9/1
6

M14 L-350 mm x1	M14 L-400 mm x4	E6 3,5*16mm x20
C1 6*43mm x2	D1 15/15 x6	A1 8*30mm x10

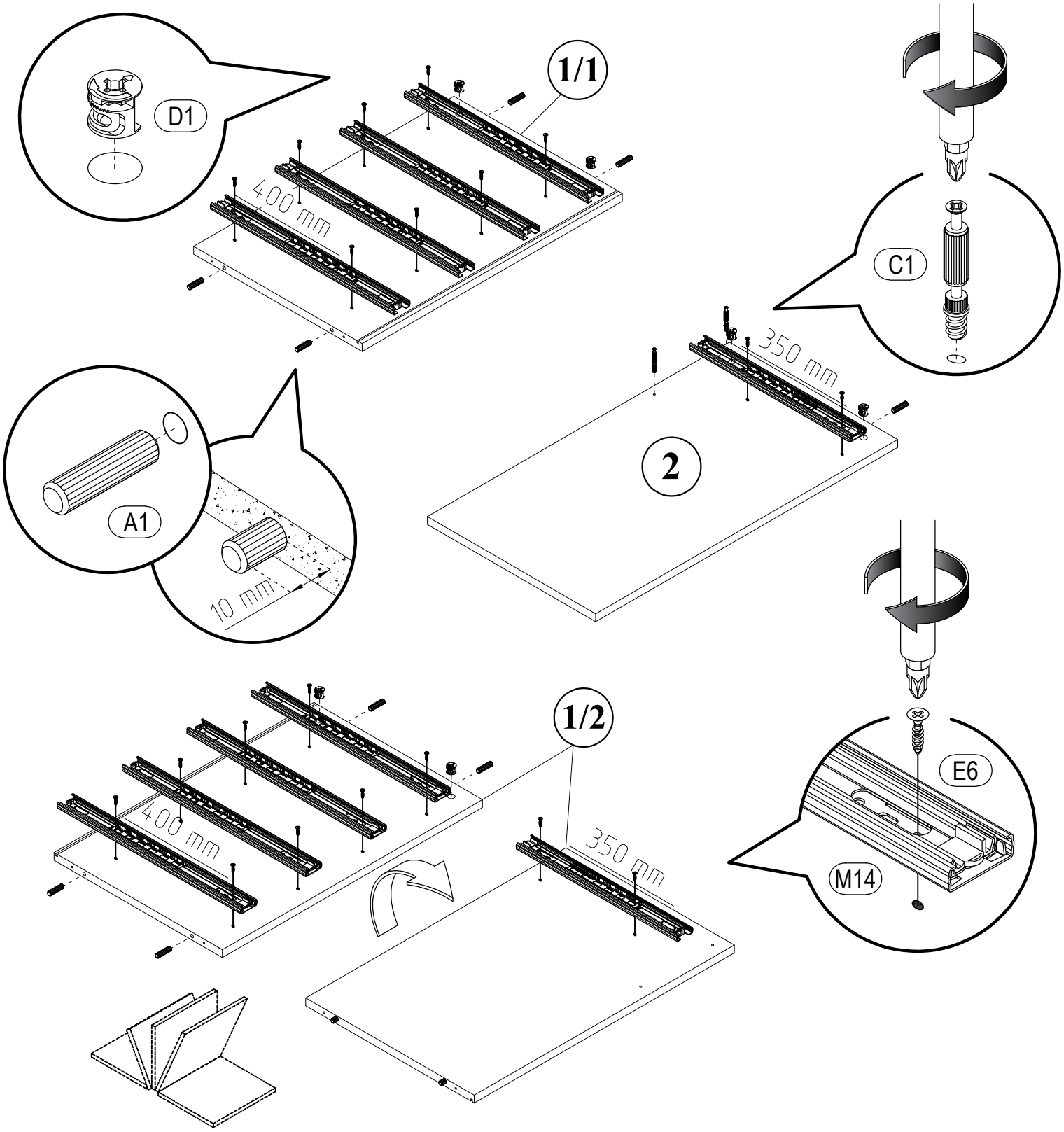

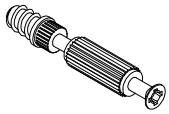 C1 6*43mm x18	D1 15/15 x14	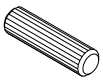 A1 8*30mm x36

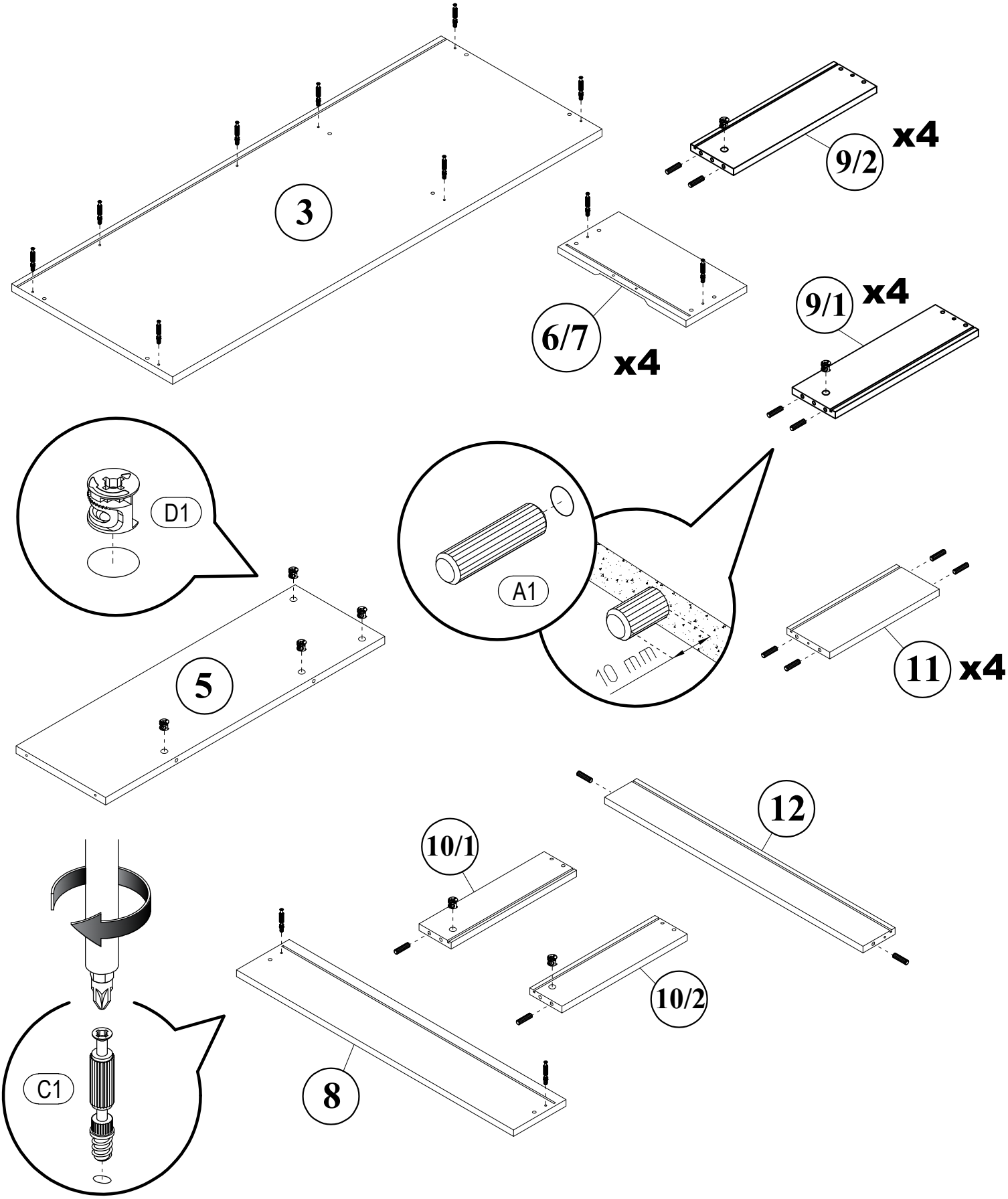

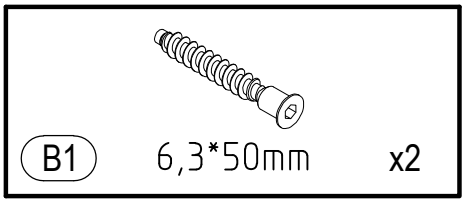
B1
6,3*50mm
x2

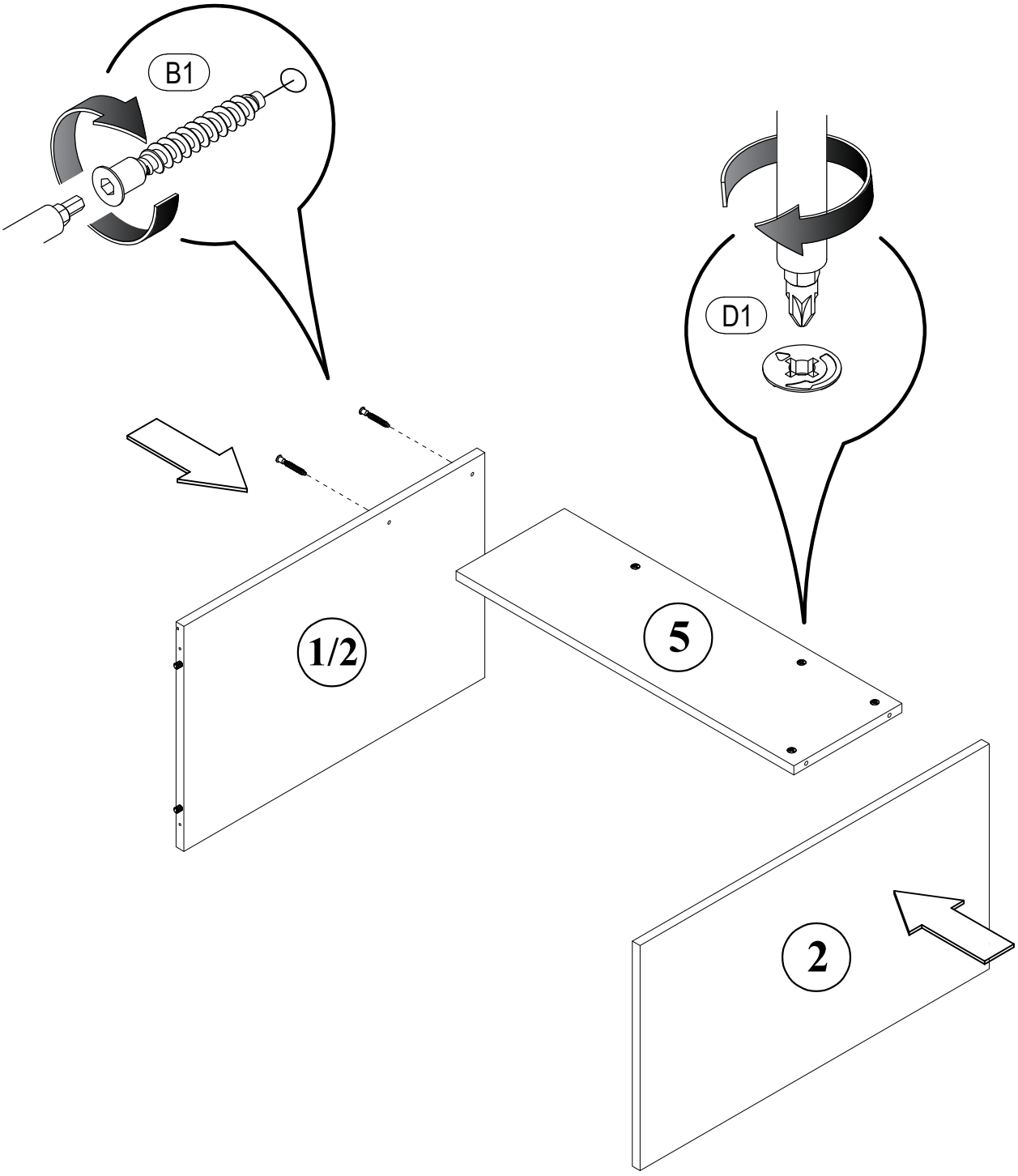
B1
D1
1/2
5
2

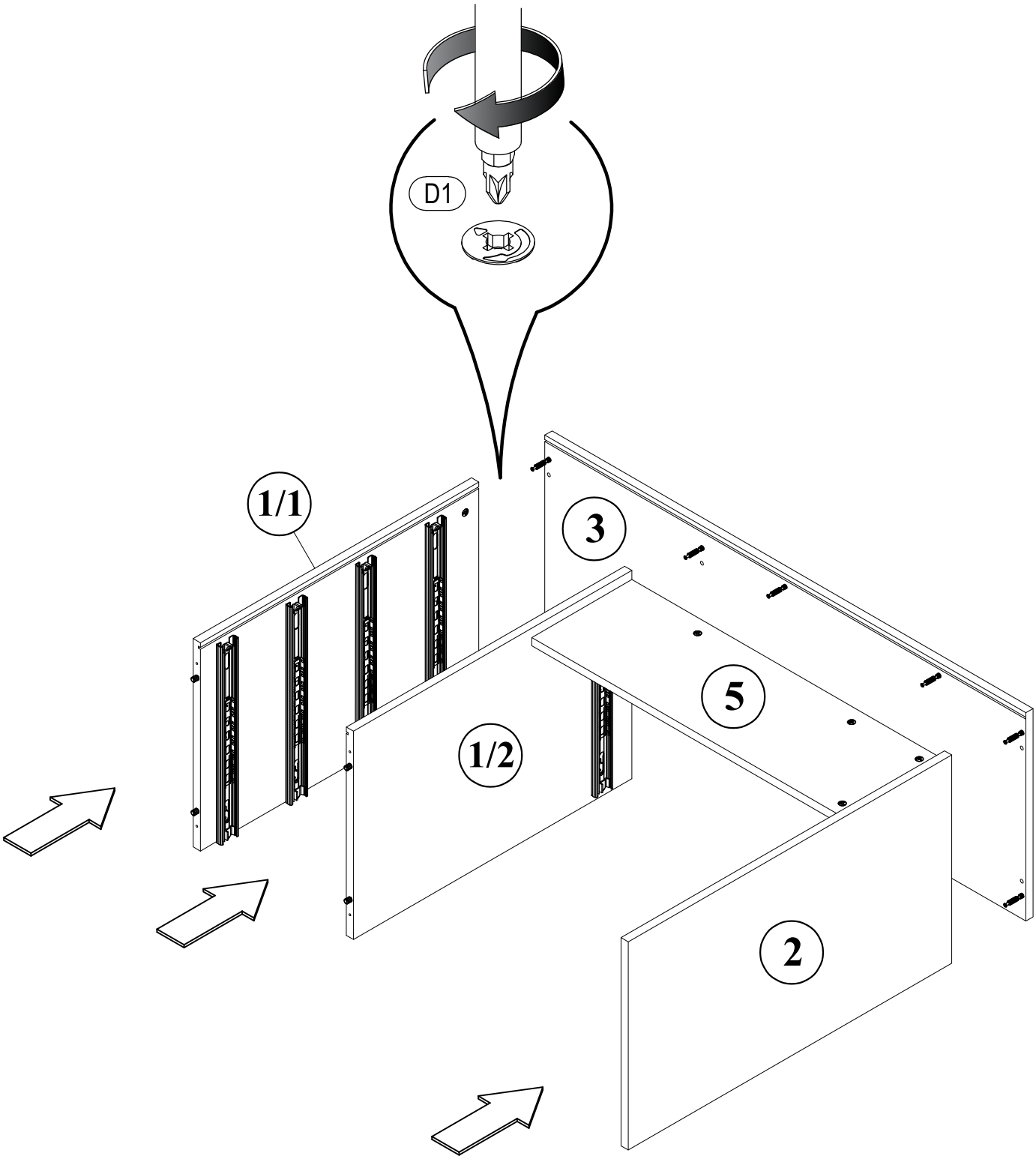
D1
1/1
3
5
1/2
2

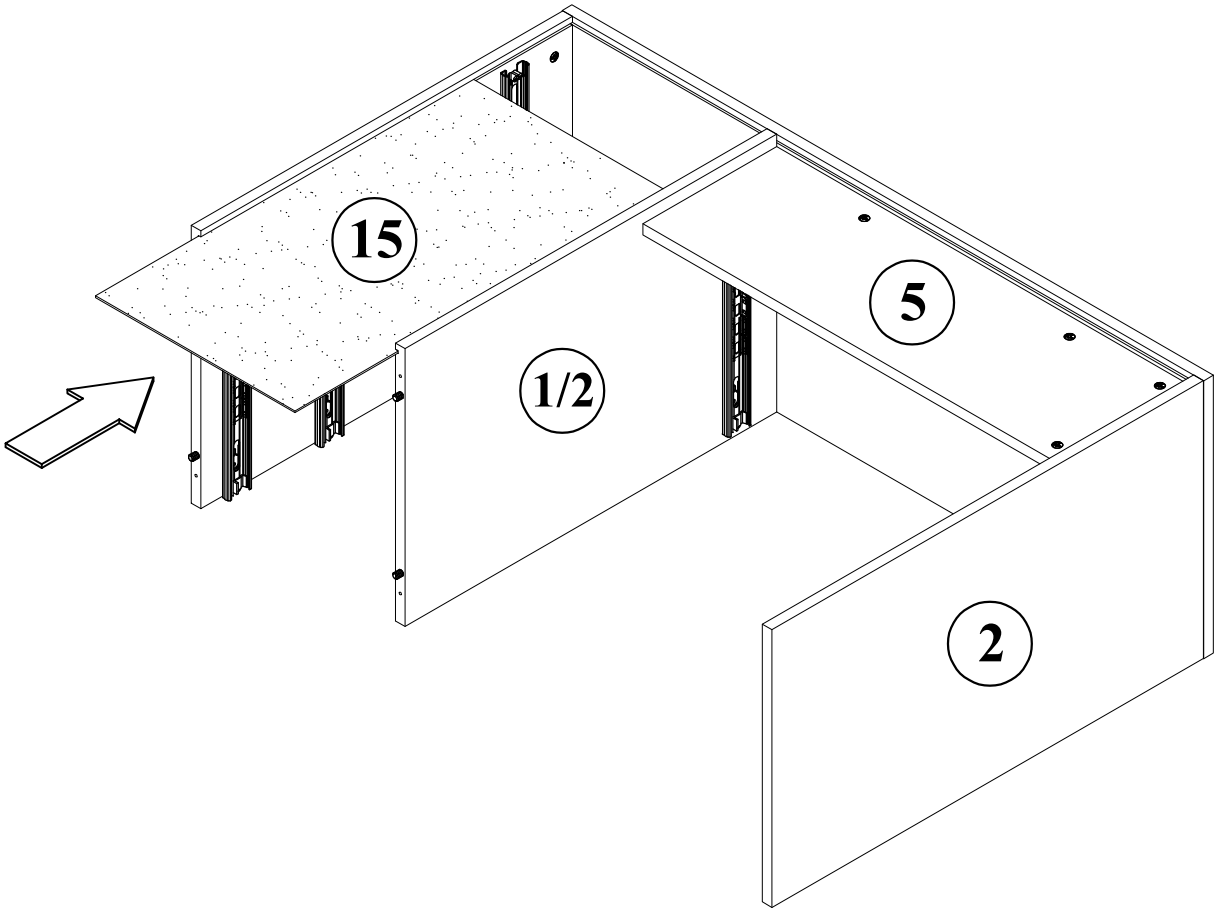
15
5
1/2
2

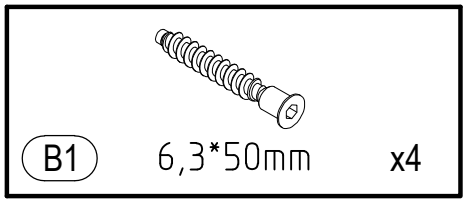
B1
6,3*50mm
x4

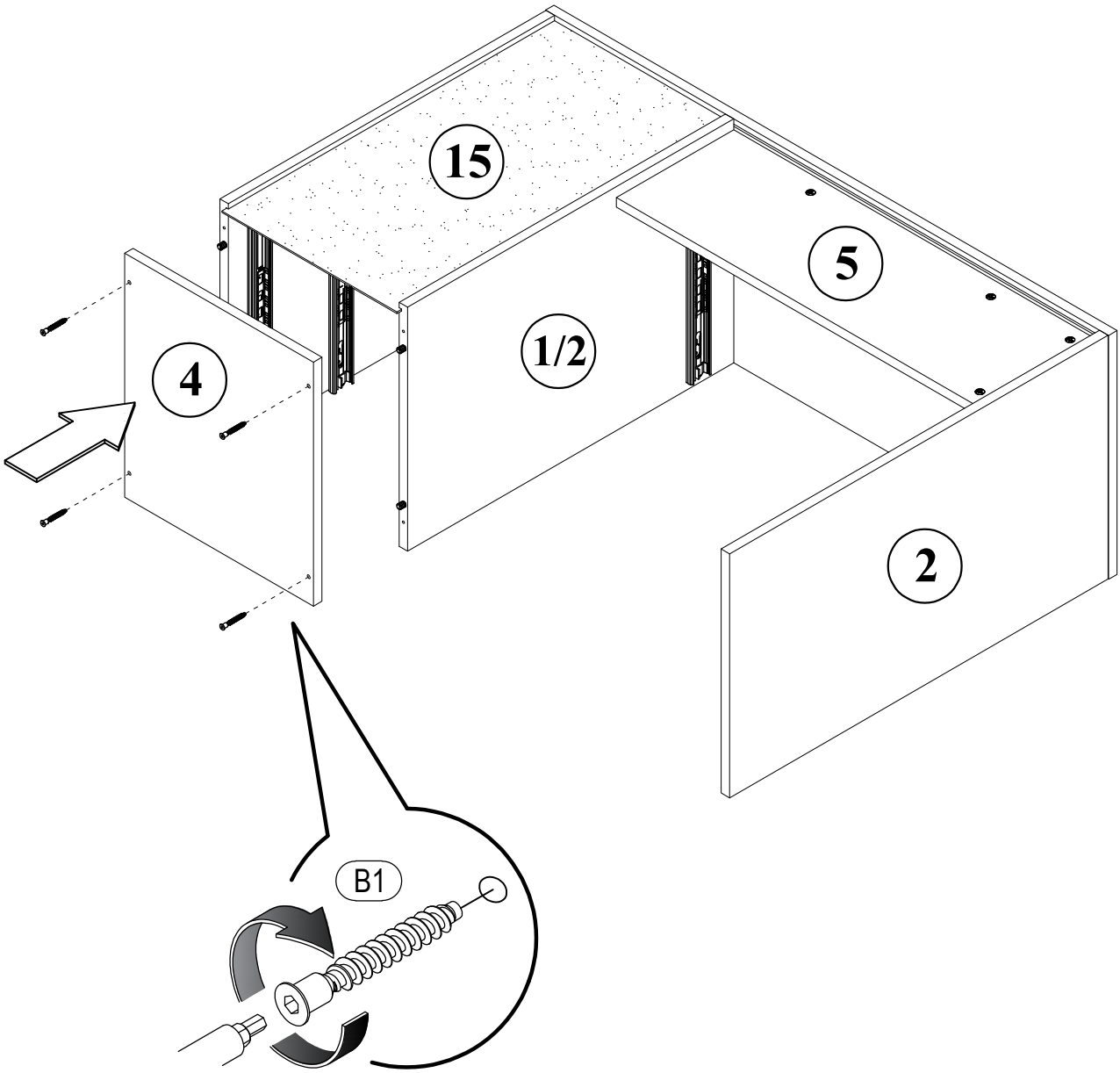
15
5
1/2
4
2
B1

H2 RV-8 x6	K42 Ф.311.099 x4	2E 4,2*16mm x16
K15 5*15*50 x2	E6 3,5*16mm x4	

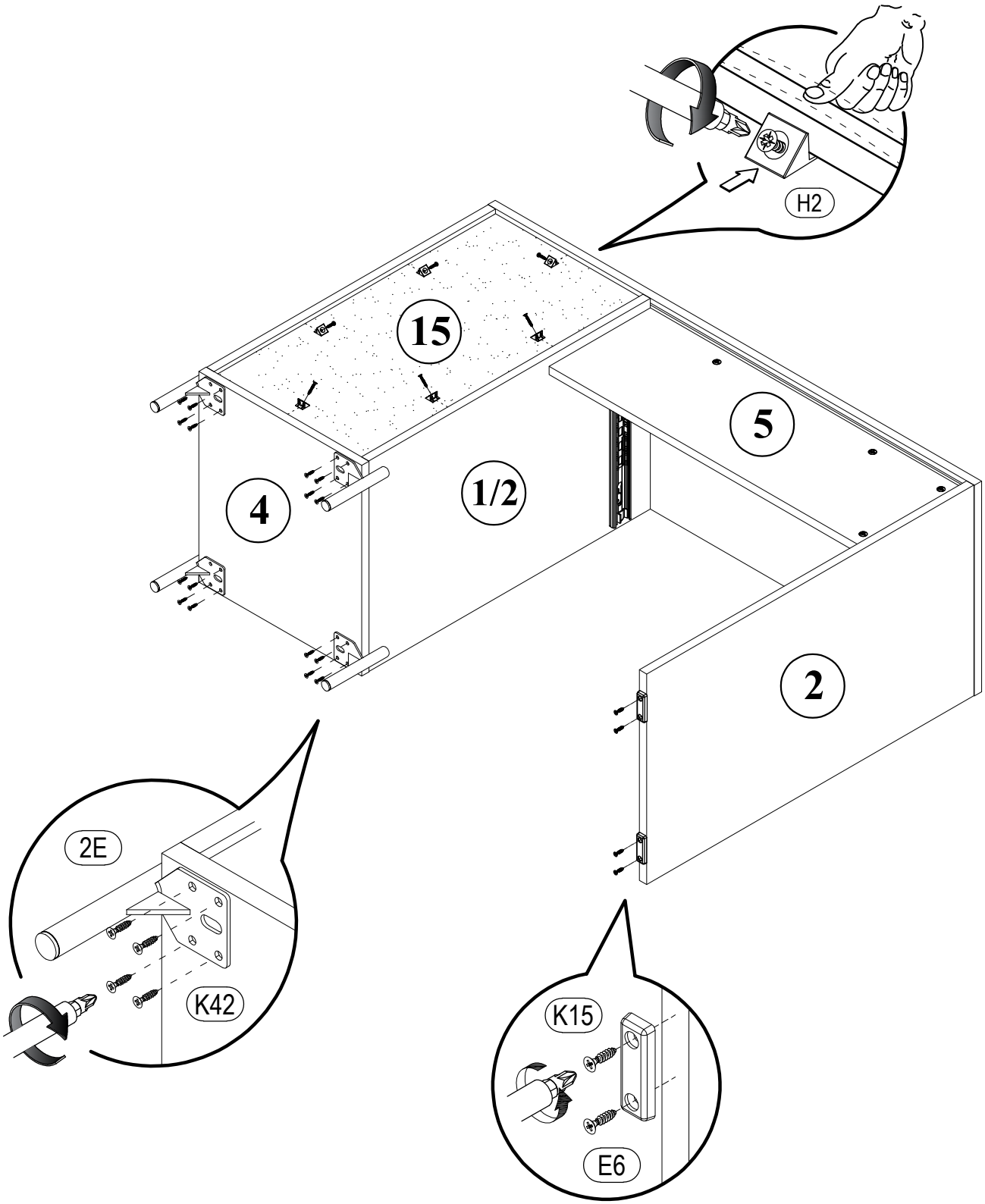

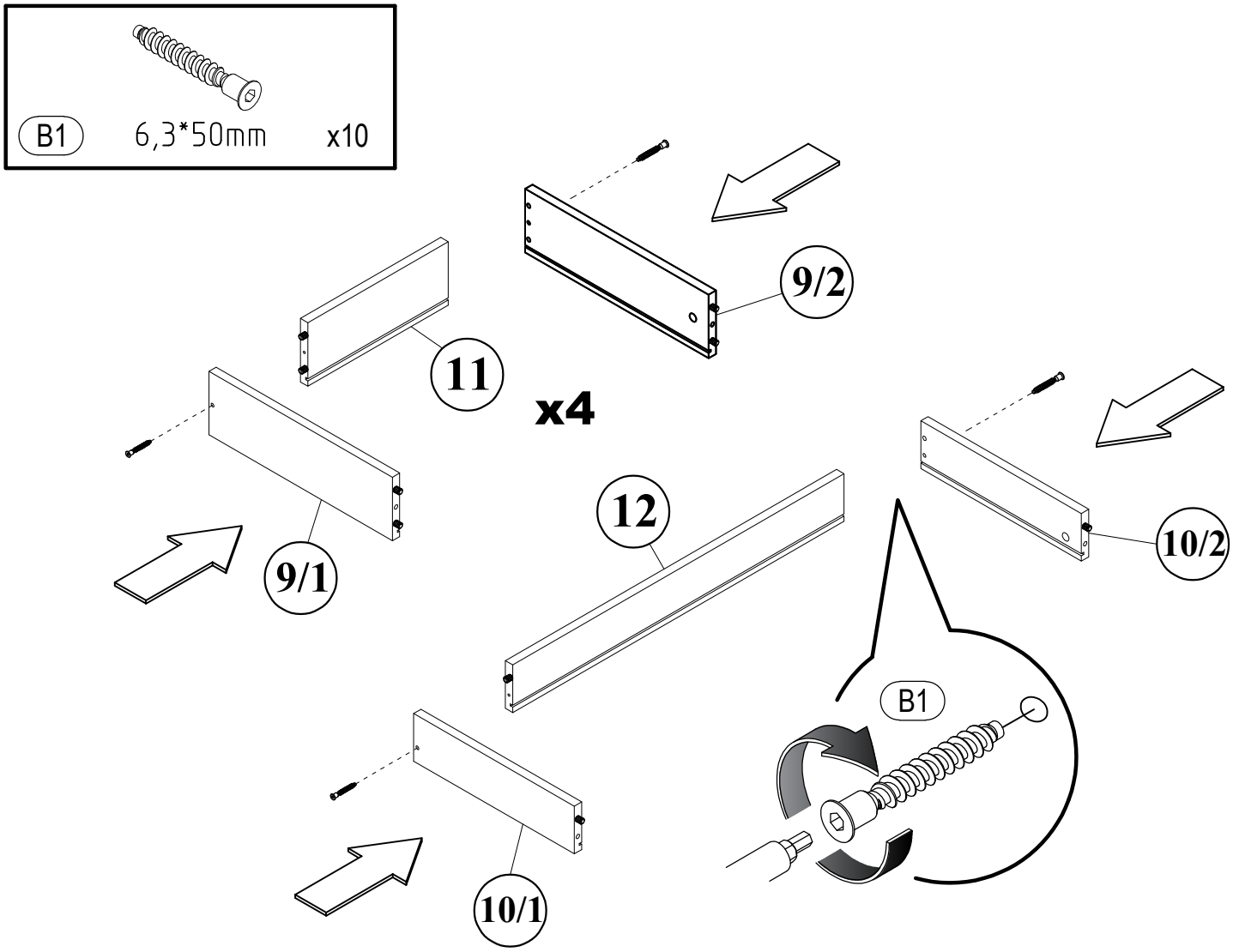
B1
6,3*50mm
x10
9/2
11
x4
12
9/1
10/2
B1
10/1

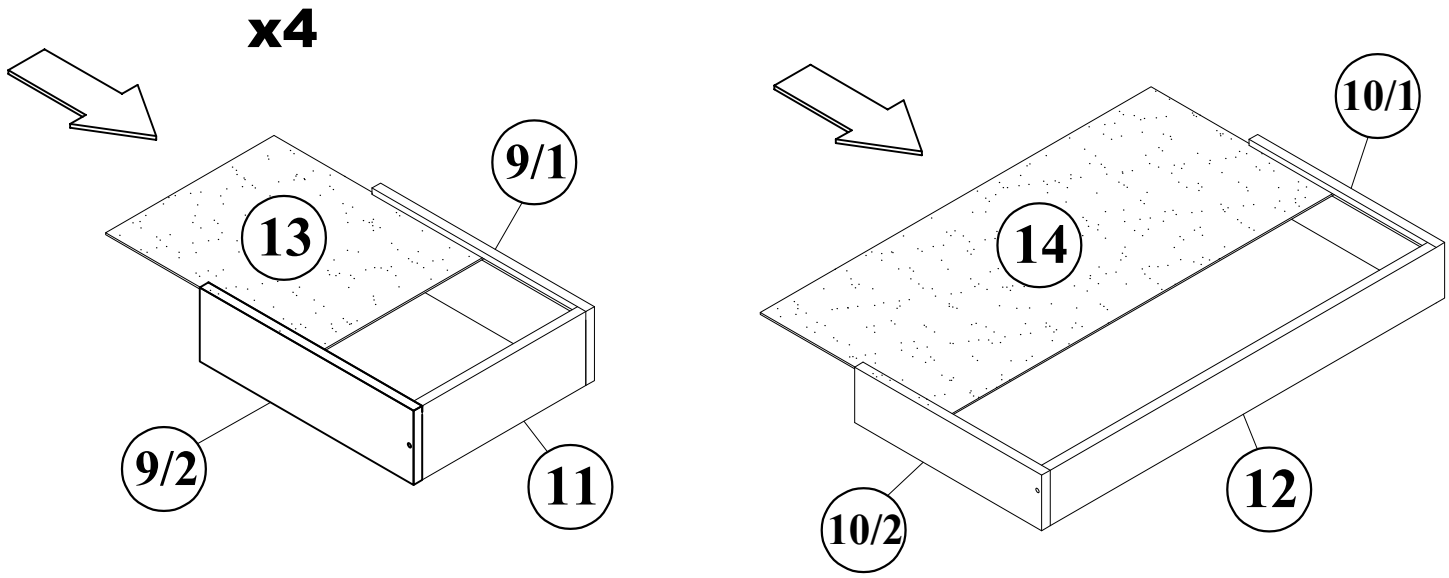
x4
9/1
13
9/2
11
10/1
14
10/2
12

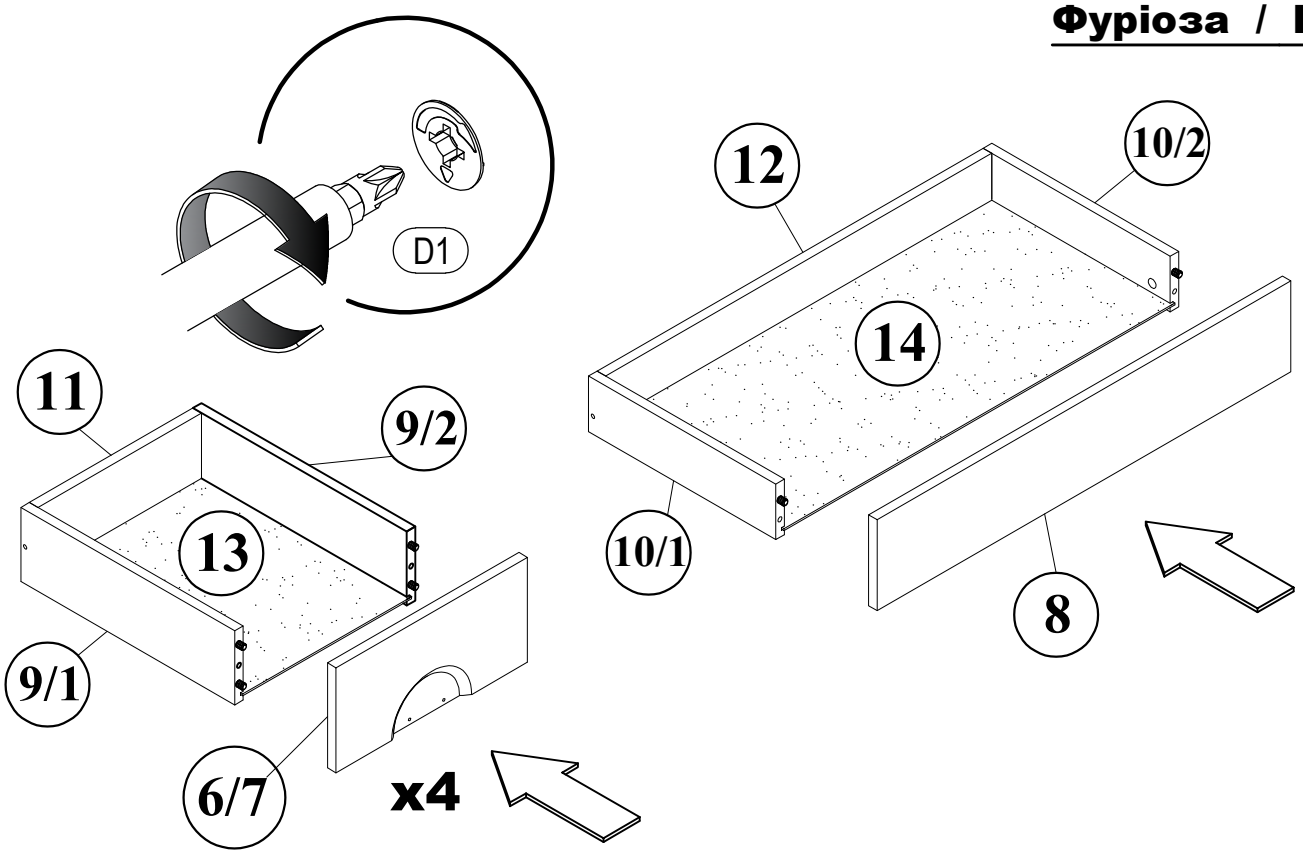

M14 L-350 mm x1	M14 L-400 mm x4	E6 3,5*16mm x22
H2 RV-8 x14	M4 L-333 mm x1	

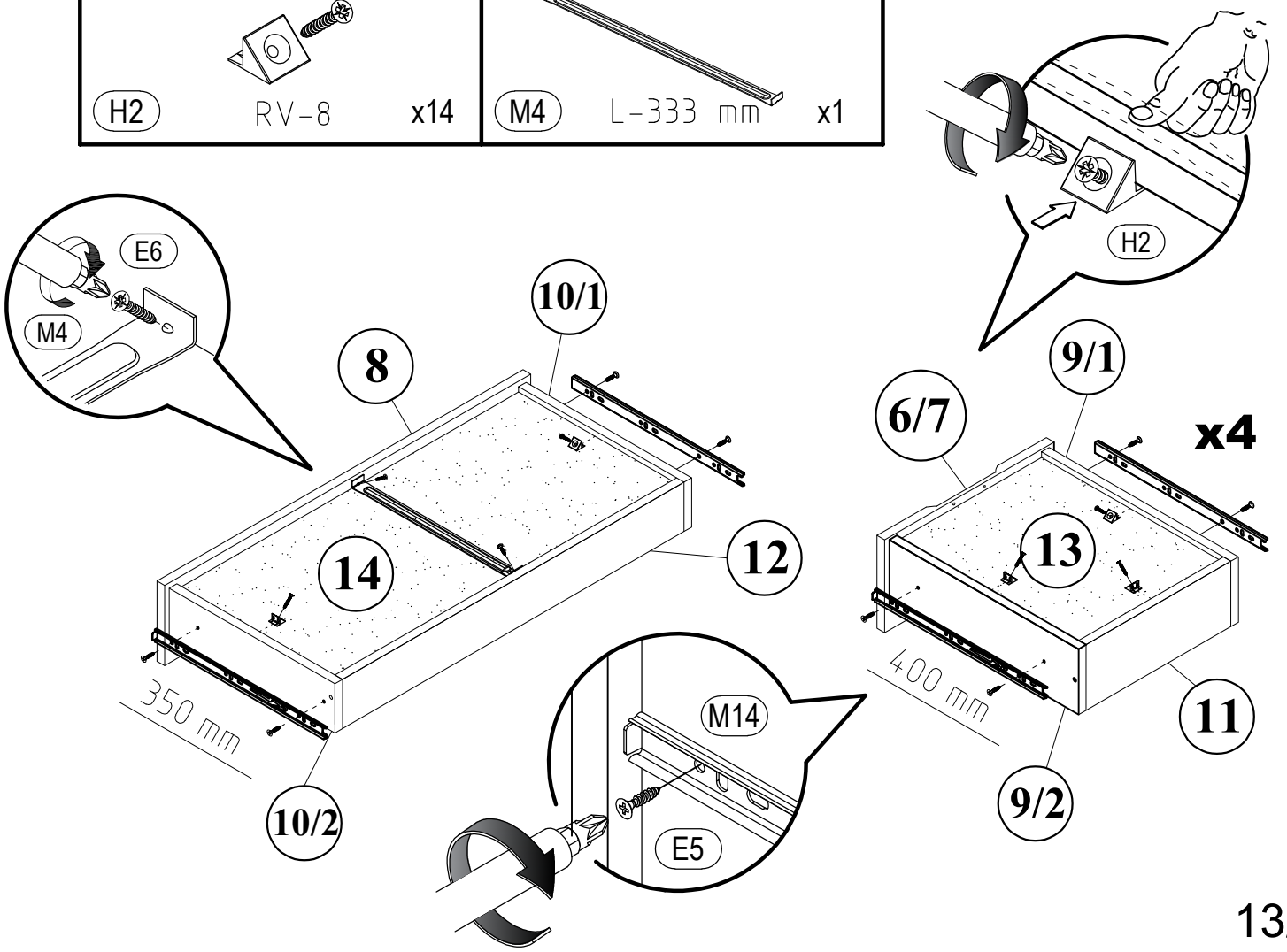

I58 9378/64 x4	G3 M 4*12mm x8

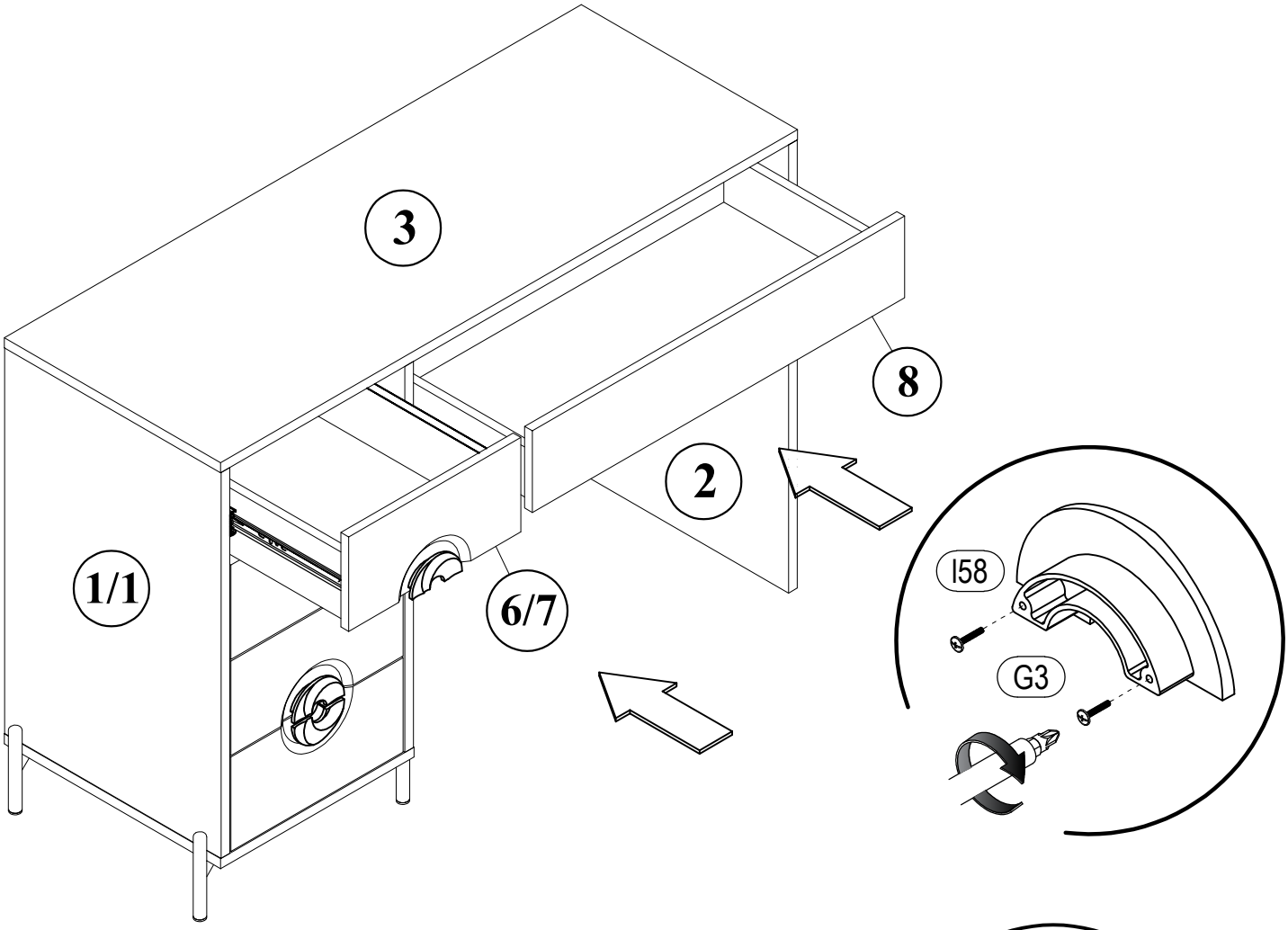

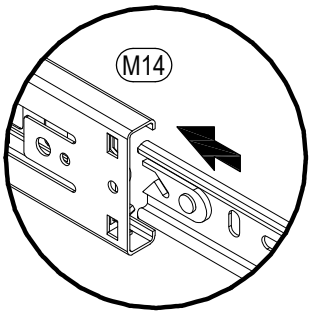

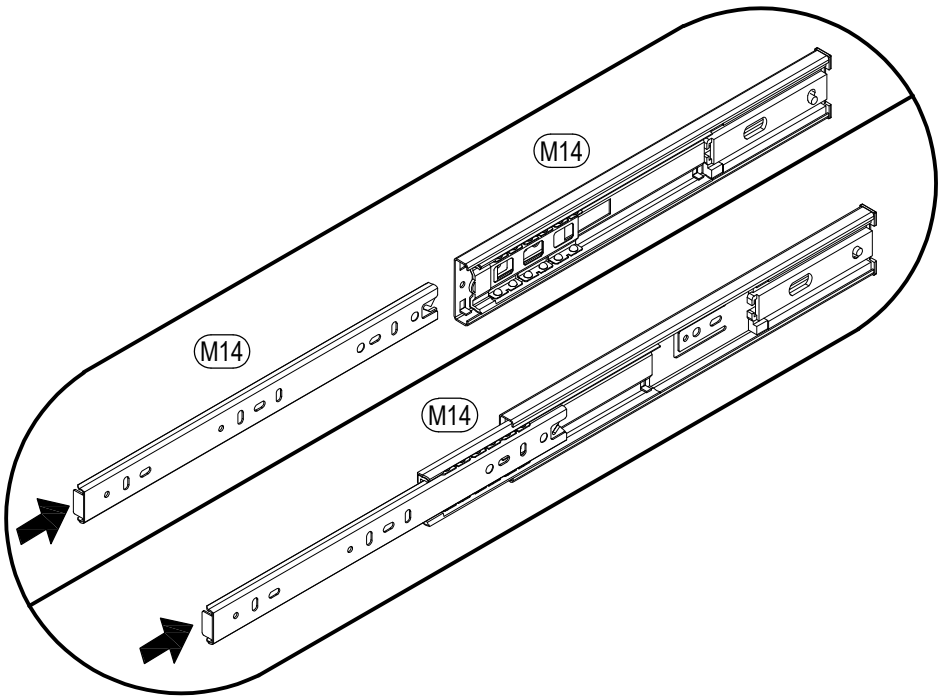

D	⌀20mm	x36	B	⌀12mm	x16

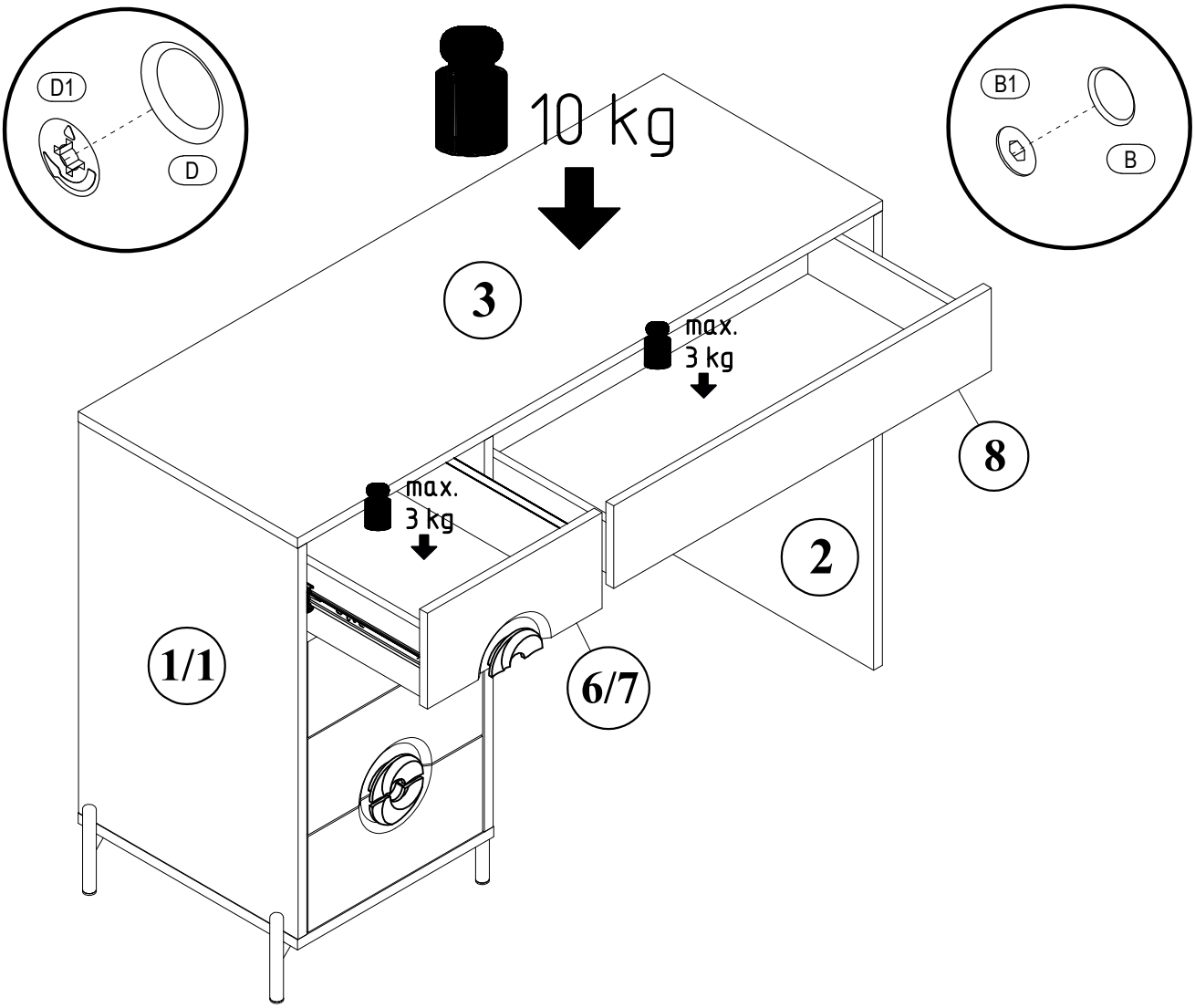

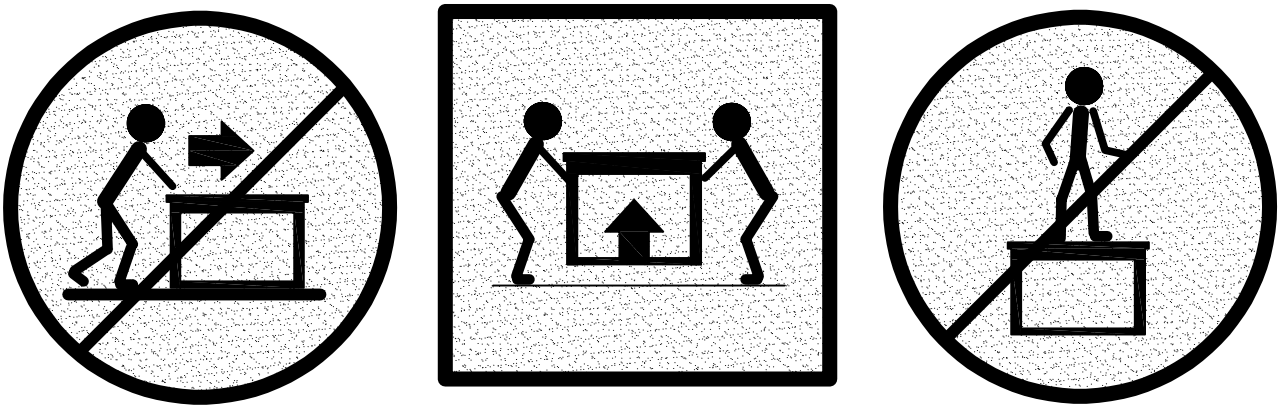

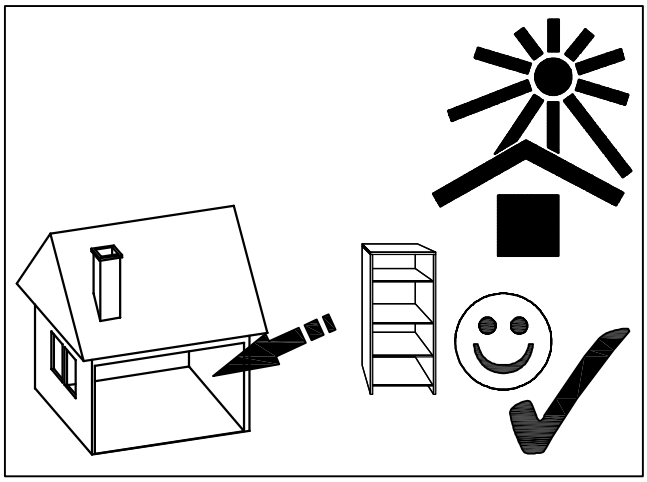

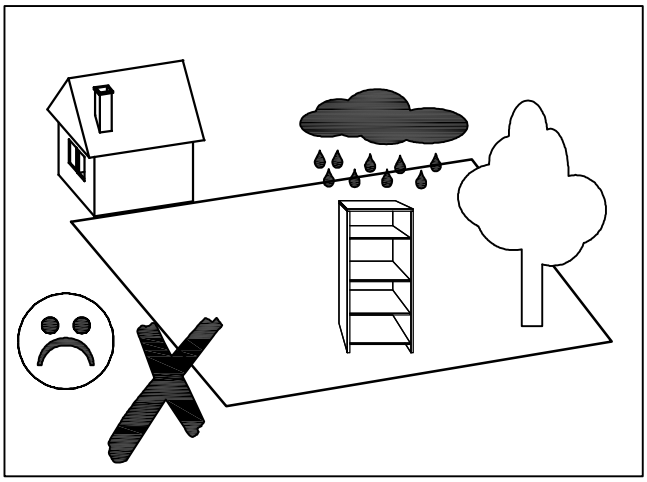

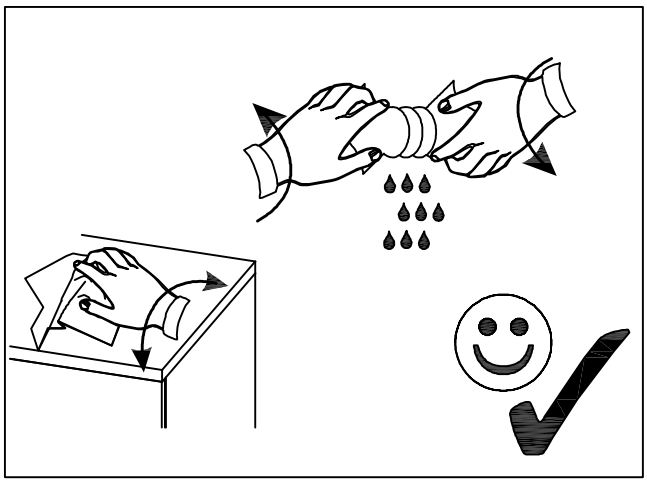

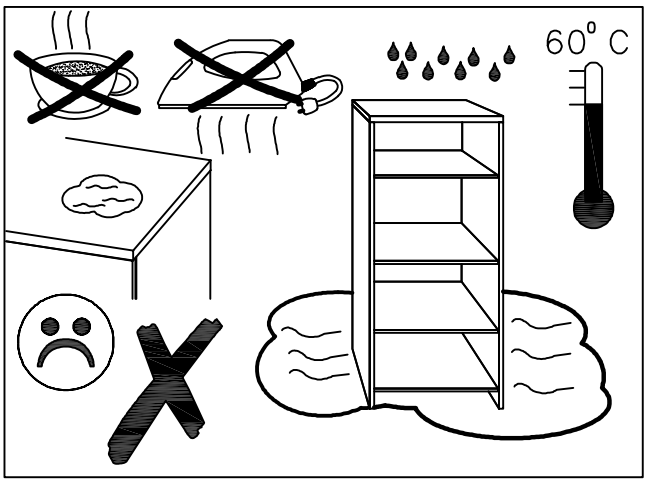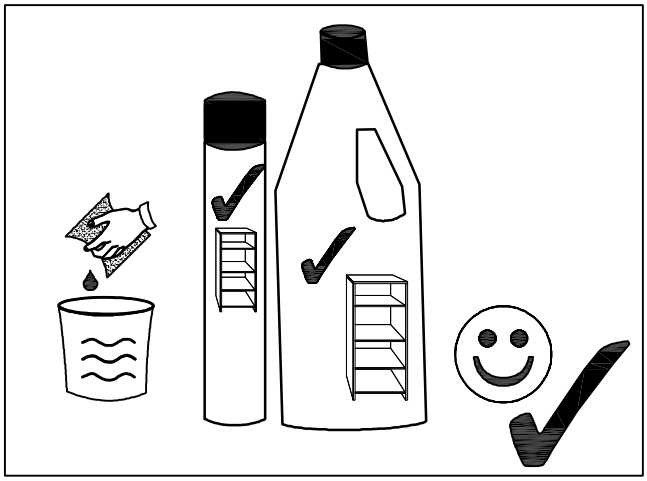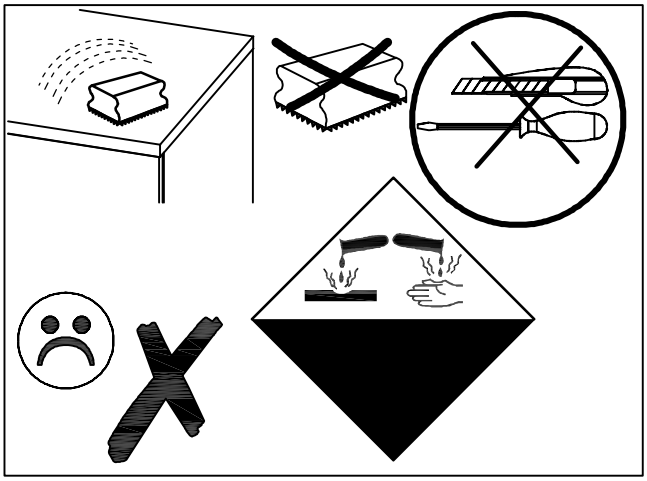
60° C